Data Sheet: Modular Remote Terminal Unit (RTU)

EMM's multipurpose Remote Terminal Unit (RTU) can be used for monitoring and controlling of a payload instrument or satellite. Unlike a typical RTU that is tailored to a specific instrument or satellite, this RTU concept foresees a highly configurable and modular design that can be adapted to specific needs. Furthermore, the design enables easy expansion of functionality.

Select the modules to compose the RTU that fulfills your needs:

- Various modules with broad range of functionalities
- Available in all EMM Product Categories[1] (mix & match)
- Expandable platform (new/additional modules)
- Structurally and thermally optimized for space environment

RTU modules at a glance

- Telemetry Controller
- Motor Controller
- Processing Units
- SpaceWire Router
- OEM and Custom Solutions
- Firmware / Software / IP cores

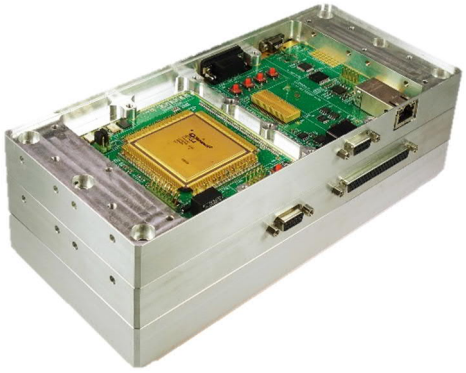

[1] available categories S1 (space qualified), R2, I3 for different levels of reliability
visit em-munich.de for more information on EMM product categories

Processing Units

Key Features

- FPGA based control and processing
- RTU internal and external SpaceWire I/Fs
- 32 Mbit SRAM memory

Key element of this board is the radiation-tolerant Microsemi RTG4 FPGA. A variety of RTU internal and external interfaces allow control and monitoring of other RTU modules and external equipment.

IP cores

Smart SpaceWire Router with a configurable number of SpaceWire ports (2 up to 16) and multicasting functionality according to the newest issue of ECSS-E-ST-50-12C.

Memory controllers for LPDDR3 (low-power), SRAM and FRAM companion memory components up to 4 GB.

RISC-V processor core in VHDL (RTL) that can be instantiated up to 16 times inside one FPGA (depending on resources of the FPGA). A Real-Time Operating System enables cache-coherence and processor utilization-dependent task distribution among the processors.

System Integrity Manager (former R-core): An IP that monitors the system behaviour also after automatic reset and adjusts the Latch-up protection according to environmental and intrinsic conditions e.g. power consumption depending on operational mode. Via this IP core, two R2 modules are "interconnected" which increases the overall system reliability and availability by 25%.

Resnet50 based Neural Network for real-time object recognition in video streams. This piece of artificial intelligence can be trained and parameterized from ground so that the video stream of an Earth Observation camera is pre-processed in orbit and e.g. cloud-covered area can be deleted from the data to save up the downlink budget for important information.

SpaceWire to CAN converter for connecting subsystems to the SpaceWire router via CAN interface and create a versatile communication node that acts as real-time link between satellite subsystems.

Motor Controller IP supports PMSM and BLDC motors. A field-oriented control is used in order to operate the motor optimally with regard to torque and power loss.

  info@em-munich.de

Telemetry Controller

Key Features

- 64 channel MUX
- 13kSPS 12 bit ADC
- 3% Precision Adjustable Current Source
- Threshold Monitoring
- 8 x Bi-level Logic
- 10 bit DAC
- Supports Parallel or dual SPI Interface
- Radiation Tolerant: 100krad TID, 50kad ELDRS

The Data Acquisition and Telemetry Module based on Microsemi's LX7730 eases the instrument's on-board computer with concurrent tasks such as acquisition of temperature and housekeeping data. It contains a 64 channel universal input multiplexer, which can be configured as a mix of different sensor inputs. The recorded data can be transferred to the FPGA processing module via a parallel interface or redundant SPI interfaces.

SpaceWire Router

The SpaceWire Router switch is capable of connecting up to ten nodes within a communication network. It is based on the space qualified component AT910E from Microchip. This board enables data transfer between other instrument equipment and the RTU.

Key Features

- 8 Bidirectional SpaceWire links
  - Full duplex communication
  - Data rate from 2 up to 200 Mbit/s in each direction
- Configuration Port
  - Read/Write Accesses to internal registers
  - Accessible from both the SpaceWire links (8 channels) and the external interfaces
  - Remote Memory Access Protocol (RMAP) support
- Time Code Interface
  - Master/Slave Capability
  - Error/Status Interface
- Operating range Voltages 3V to 3.6V
- Maximum Power consumption: all spacewire links active at 200Mbit/s : 4W
- Radiation Performance
  - Total dose up to 300 Krad (Si)
  - No single event latch-up below a LET of 80 MeV/mg/cm

Motor Controller

The SDT electronics features a high-performance and power-efficient platform that speeds development for quick time-to-market respectively motor-in-space. EMM provides a GUI-based LabView environment to configure the controller and parameterize the driving cycles (position, speed, acceleration).

Key Features

- High-performance and power-efficient control for Stepper motors, 3-phase Brushless DC and PMSM motors
- Complete closed-loop Motor Control Electronics (MCE) in HW and SW
- Supports coil current feedback and rotation or linear position sensing

Technical Specification (in combination with Processing Unit)

- FPGA-based motor control :
  - Field-oriented control for torque-, velocity- and position control
  - Clarke and Park transformations and PI loops controlling torque and flux
- Drive Module:
  - Four half-bridge N-channel MOSFET drivers
  - Sensing of phase currents
  - Feedback interfaces: Resolver, Encoders, Hall Sensors
  - Up to 2.5 A nominal motor current (tbc)
  - overvoltage, overcurrent, and undervoltage fault detection
- Total power dissipation < 15 W
- Interfaces: RS232
- Supports operation of redundant windings
- Dimensions: 240 mm x 110 mm x 60 mm (L x W x H)
- Radiation tolerant: 100 krad TID, SEE radiation hardened (tbc)
- Space-qualified design, Low-cost evaluation version with space-qualified counterparts available, Customized solutions upon request

The SDT electronics is designed to drive 2-phase stepper motors or 3-phase BLCD/PMSM motors featuring the Microsemi's rad-tolerant RTG4 FPGA and position sensing and motor controller IC LX7720. It consists of two separate modules, an FPGA-based processing module which is used to control one motor axis and a drive module including the power electronics. Thanks to this advanced characteristic, the system achieves accurate and fast conditioning of the current feedback, addressing the typical requirements of field-oriented control. Additional electronics are foreseen to operate separate/redundant windings of the motor in various redundancy configurations in order to increase the overall system reliability.

OEM and Custom Solutions

Customized modules for dedicated purposes are available upon request. Please contact Engineering Minds Munich GmbH for a request.

Structural and Thermal Characteristics

The RTU is designed in a multi-domain consideration of all electrical, mechanical, structural and thermal requirements.

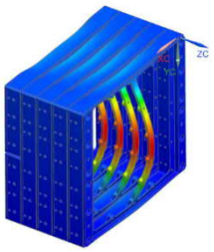

Key features

- Simulated and analyzed mechanical design for structural robustness (with regard to dynamic and static loads)
- Variable stacking options allow a pre-definition of PCB formats (multiple formats available)
- The modules are connected via internal PCB connectors (spring-loaded) which avoids an additional backplane
- Defined optimized positions for the interface of thermal sinks, connectors and grounding points
- Multiple fixation options for the stacked elements for best integration in the higher level system
- Facilitated integration by well-defined RTU thermal interface points

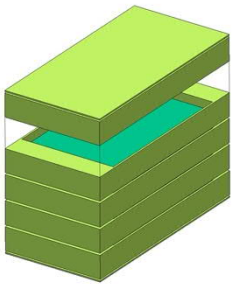

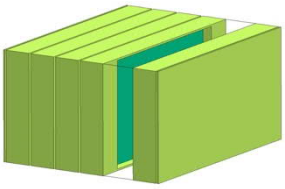

Dimensions

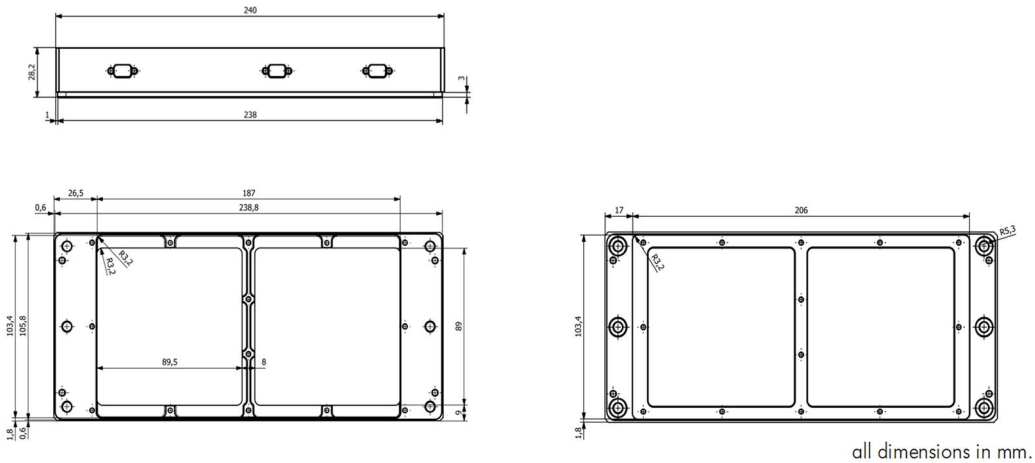

  info@em-munich.de